Robotics and Its Application AI352

Unit 3: Robot Dynamics

Topics Cover: Equation of Motion, Inverse and Forward Dynamics, Inertia matrix and dynamic Models, Torque Analysis, Lagrangian Mechanics

By Dr. Aaishwarya Bajaj

Teaching Assistant DoAI, SVNIT,Surat

Robot Dynamics

Robot dynamics is the study of the relationship between forces/torques and the resulting motion (accelerations) of a robot's links, essential for simulation, design, and control.

It involves applying classical mechanics to model rigid-body systems, including mass, inertia, and joint movements.

Robot Dynamics

Forward Dynamics

Inverse Dynamics

1. Forward Dynamics: Predicts the robot's acceleration and motion based on applied torques/forces. It is also known as Direct Dynamics. It is mainly used for simulation
2. Inverse Dynamics: Determines the required joint torques/forces to achieve a desired trajectory

equations of motion

describe the relationship between forces/torques and motion (in joint space or workspace variables)

two possible goals:

1. Given motion variables (e.g. $\vec{\theta}, \dot{\vec{\theta}}, \ddot{\vec{\theta}}$ or $\vec{x}, \dot{\vec{x}}, \ddot{\vec{x}}$), what joint torques ($\vec{\tau}$) or end-effector forces ($\vec{f}$) would have been the cause? *(this is inverse dynamics)*

2. Given joint torques ($\vec{\tau}$) or end-effector forces ($\vec{f}$), what motions (e.g. $\vec{\theta}, \dot{\vec{\theta}}, \ddot{\vec{\theta}}$ or $\vec{x}, \dot{\vec{x}}, \ddot{\vec{x}}$) would result? *(this is forward dynamics)*

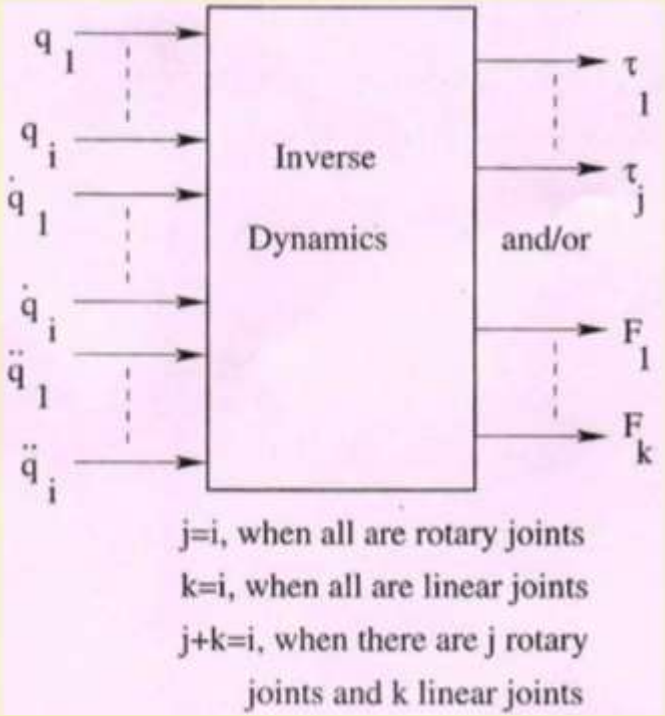

Inverse Dynamics

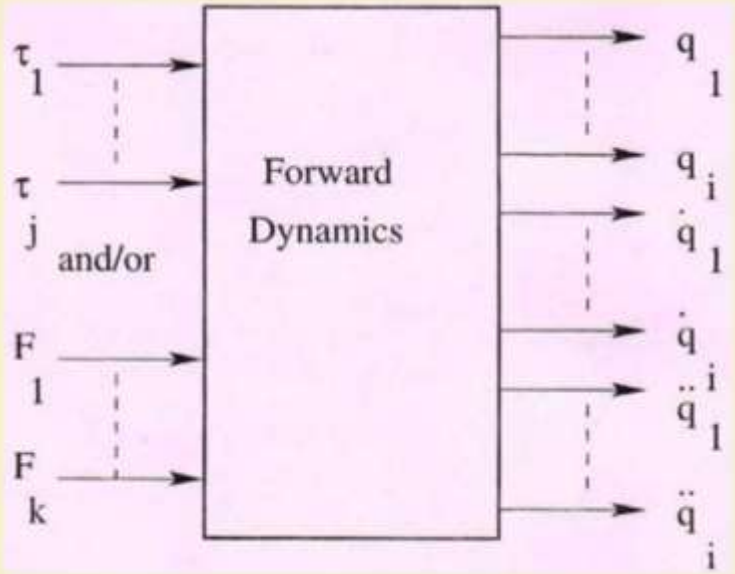

Forward Dynamics

Robot Dynamics

- To determine joint torques/forces
- Robotic joint torque consists of inertia, centrifugal and Coriolis and gravity terms

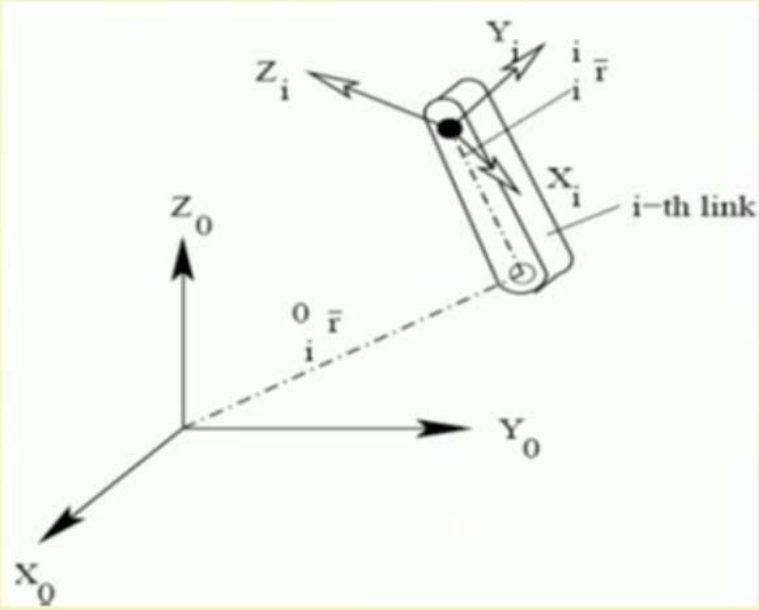

Inertia Term

Depends on mass distribution of the links and it is expressed in terms of moment of inertia tensor

Coriolis Term:

The Coriolis force is a pseudo force that acts on the objects in motion within a frame of reference that rotates w.r.t. the inertial frame. (When ever there is sliding joint on rotary joint)

Gravity Term:

Acceleration due to gravity

Let,

$${}^{i}_{i}\bar{r} = \text{position of a fixed point lying on } i\text{-th rigid link expressed in its own coordinate system}$$

$$= \begin{bmatrix} x_i \\ y_i \\ z_i \\ 1 \end{bmatrix}$$

The same point can be expressed in base coordinate system as follows:

$${}^{0}_{i}\bar{r} = {}^{0}_{i}T \; {}^{i}_{i}\bar{r}$$

where $${}^{0}_{i}T = {}^{0}_{1}T \; {}^{1}_{2}T \; {}^{2}_{3}T \; \ldots\ldots\ldots \; {}^{i-1}_{i}T$$

Inertia Tensor of i-th link

$$\boldsymbol{J_i} = \int {}^{i}_{i}\bar{\boldsymbol{r}}\,{}^{i}_{i}\bar{\boldsymbol{r}}^{T'}\,\boldsymbol{dm}$$

$$= \begin{bmatrix} \int x_i^2 dm & \int x_i y_i dm & \int x_i z_i dm & \int x_i dm \\ \int x_i y_i dm & \int y_i^2 dm & \int y_i z_i dm & \int y_i dm \\ \int x_i z_i dm & \int y_i z_i dm & \int z_i^2 dm & \int z_i dm \\ \int x_i dm & \int y_i dm & \int z_i dm & \int dm \end{bmatrix}$$

Various Cases

Case 1: Link with Rectangular Cross-section

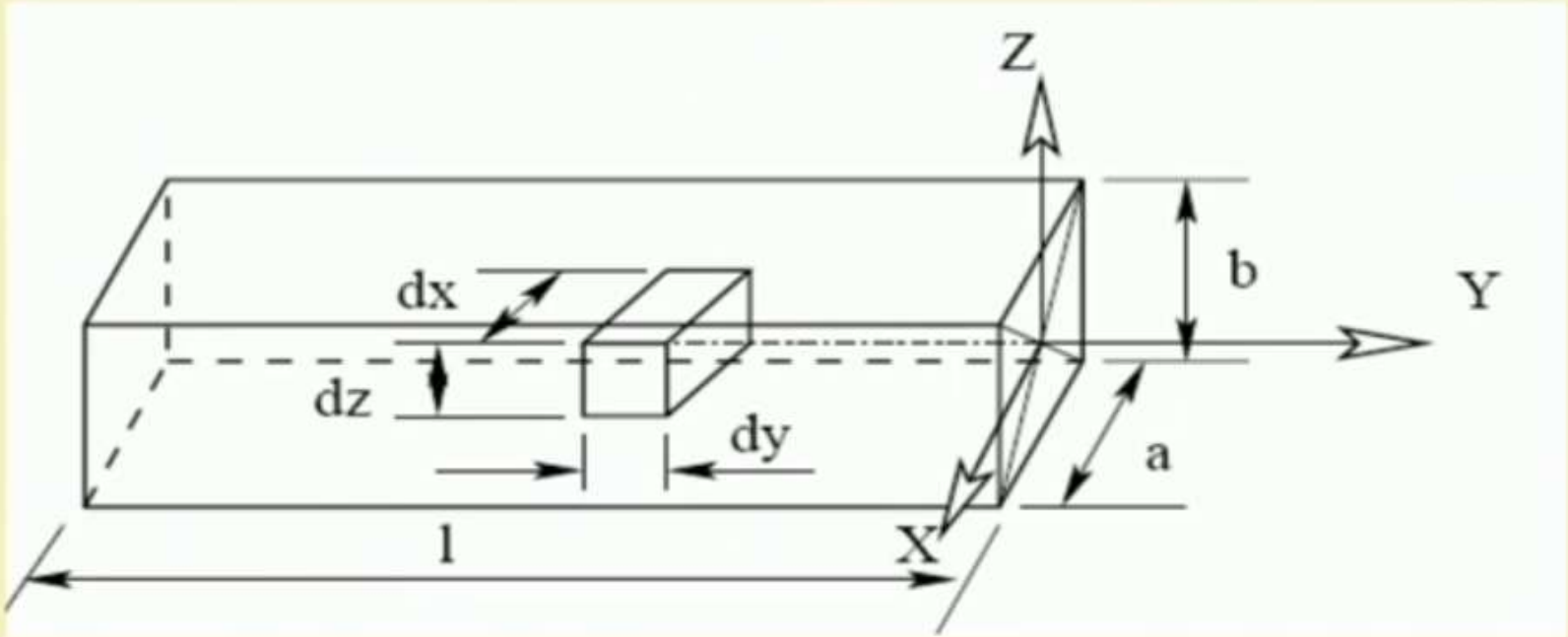

Moment of Inertia (positive value)

Differential mass $dm = \rho dxdydz$

$$I_{XX} = \int_{-b/2}^{b/2}\int_{-l}^{0}\int_{-a/2}^{a/2}\left(y^2 + z^2\right)\rho dxdydz$$

$$= m\left(\frac{l^2}{3} + \frac{b^2}{12}\right)$$

$$I_{YY} = \int_{-b/2}^{b/2}\int_{-l}^{0}\int_{-a/2}^{a/2}\left(x^2 + z^2\right)\rho dxdydz$$

$$= m\left(\frac{a^2}{12} + \frac{b^2}{12}\right)$$

$$I_{zz} = \int_{-b/2}^{b/2} \int_{-l}^{0} \int_{-a/2}^{a/2} \left(x^2 + y^2\right) \rho \, dx dy dz$$

$$= m\left(\frac{l^2}{3} + \frac{a^2}{12}\right)$$

Product of Inertia (positive/negative/zero)

$$I_{XY} = \int_{-b/2}^{b/2} \int_{-l}^{0} \int_{-a/2}^{a/2} xy \rho \, dx dy dz = 0$$

$$I_{YZ} = \int_{-b/2}^{b/2} \int_{-l}^{0} \int_{-a/2}^{a/2} yz \rho \, dx dy dz = 0$$

$$I_{ZX} = \int_{-b/2}^{b/2} \int_{-l}^{0} \int_{-a/2}^{a/2} zx\rho\, dxdydz = 0$$

$$\int xdm = \int_{-b/2}^{b/2} \int_{-l}^{0} \int_{-a/2}^{a/2} x\rho\, dxdydz = 0$$

$$\int ydm = -m\frac{l}{2} = m\overline{y_i}$$

$$\int z\,dm = 0$$

Mass center $= \left(\overline{x_i}, \overline{y_i}, \overline{z_i}\right)$

$= (0, -l/2, 0)$

$$\int dm = m$$

Inertia tensor, J_i can be written as

$$J_i = \begin{bmatrix} \frac{-I_{XX}+I_{YY}+I_{ZZ}}{2} & I_{XY} & I_{ZX} & m_i\bar{x}_i \\ I_{XY} & \frac{I_{XX}-I_{YY}+I_{ZZ}}{2} & I_{YZ} & m_i\bar{y}_i \\ I_{ZX} & I_{YZ} & \frac{I_{XX}+I_{YY}-I_{ZZ}}{2} & m_i\bar{z}_i \\ m_i\bar{x}_i & m_i\bar{y}_i & m_i\bar{z}_i & m_i \end{bmatrix}$$

$$= \begin{bmatrix} \frac{ma^2}{12} & 0 & 0 & 0 \\ 0 & \frac{ml^2}{3} & 0 & -\frac{ml}{2} \\ 0 & 0 & \frac{mb^2}{12} & 0 \\ 0 & -\frac{ml}{2} & 0 & m \end{bmatrix}$$

For a slender link ,
($l >> a$ and $l >> b$)

$$= \begin{bmatrix} 0 & 0 & 0 & 0 \\ 0 & \frac{ml^2}{3} & 0 & -\frac{ml}{2} \\ 0 & 0 & 0 & 0 \\ 0 & -\frac{ml}{2} & 0 & m \end{bmatrix}$$

Case 2: Robotic link of Circular Cross-section

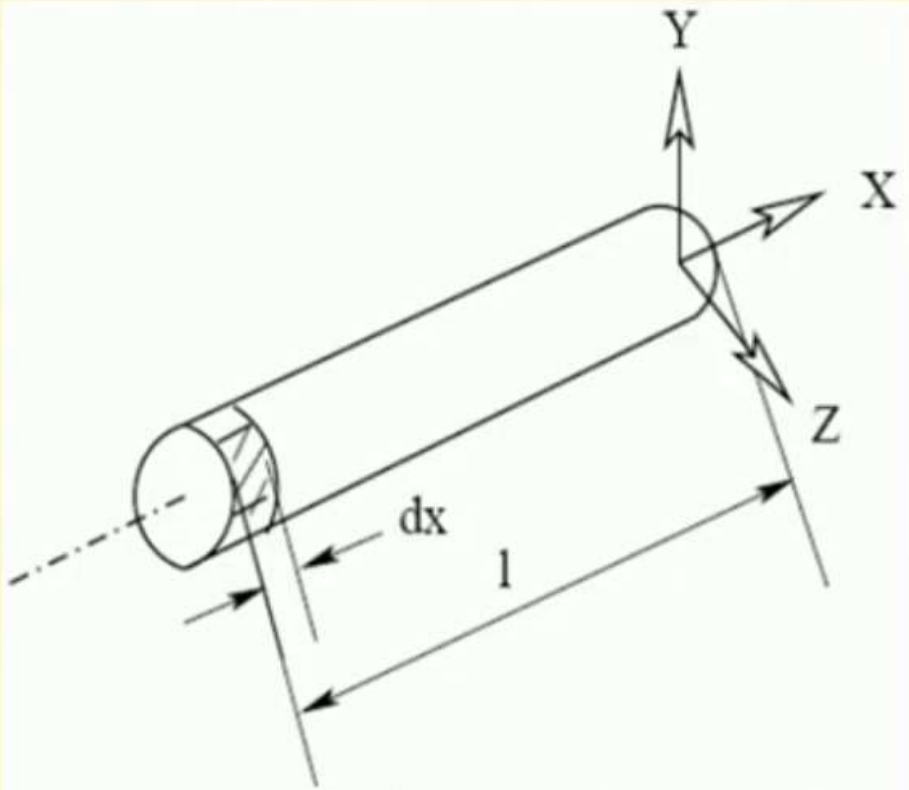

R: Radius of the circular link

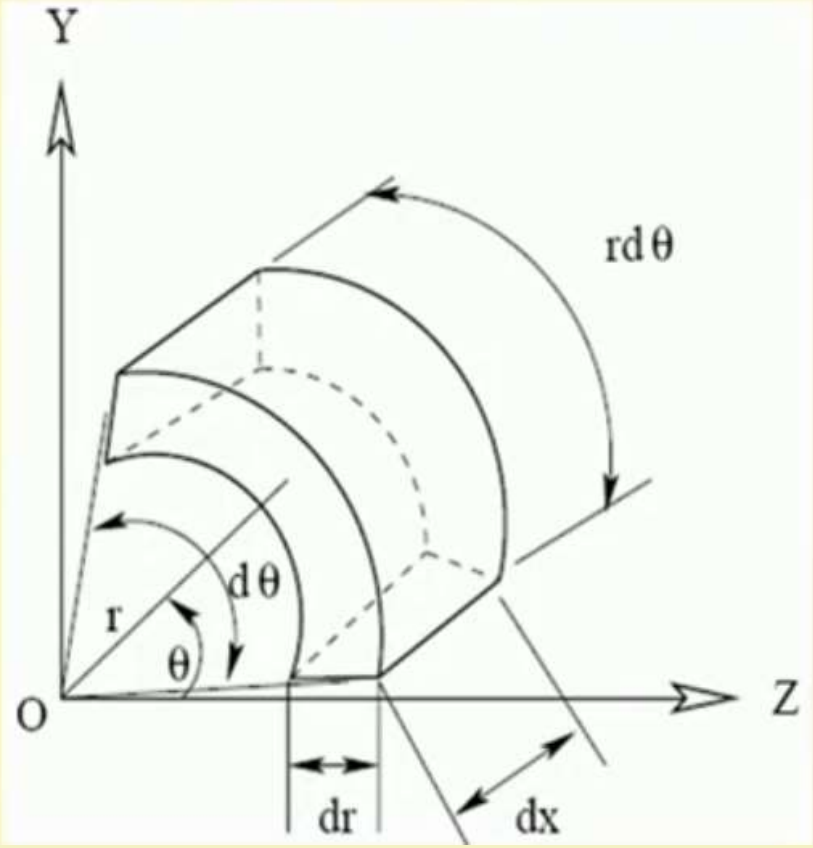

Let us consider a link of length l having circular cross-section of radius r

$$y = r\sin\theta$$
$$z = r\cos\theta$$

Volume of small element $dv = r\,d\theta dr dx$

Mass of small element $dm = \rho dv$, where ρ = density

Moment of Inertia

$$I_{XX} = \int_V \left(y^2 + z^2\right) dm = \int_{-l}^{0}\int_{0}^{r}\int_{0}^{2\pi} r^2 \rho\, r\, d\theta\, dr dx = \frac{1}{2} m r^2$$

$$I_{YY} = \int_V \left(x^2 + z^2\right) dm$$

$$= \int_{-l}^{0}\int_{0}^{r}\int_{0}^{2\pi} \left(x^2 + r^2\cos^2\theta\right) \rho r d\theta dr dx$$

$$= \frac{ml^2}{3} + \frac{mr^2}{4}$$

$$I_{ZZ} = \int_V \left(x^2 + y^2\right) dm$$

$$= \int_{-l}^{0}\int_{0}^{r}\int_{0}^{2\pi} \left(x^2 + r^2\sin^2\theta\right) \rho r d\theta dr dx$$

$$= \frac{ml^2}{3} + \frac{mr^2}{4}$$

Product of Inertia

$$I_{XY} = \int_V xydm$$

$$= \int_{-l}^{0}\int_{0}^{r}\int_{0}^{2\pi} xr\sin\theta\rho rd\theta drdx$$

$$= 0$$

Similarly, $I_{YZ} = 0$; $I_{ZX} = 0$

$$\int_V x\,dm = \int_{-l}^{0}\int_{0}^{r}\int_{0}^{2\pi} x\rho r\,d\theta\,dr\,dx$$

$$= -\frac{1}{2}ml$$

$$\int_V y\,dm = 0$$

$$\int_V z\,dm = 0$$

$$\int dm = m$$

Mass center $= \left(\bar{x}_i, \bar{y}_i, \bar{z}_i\right) = (-l/2, 0, 0)$

Inertia Tensor

$$J_i = \begin{bmatrix} \frac{ml^2}{3} & 0 & 0 & -\frac{ml}{2} \\ 0 & \frac{mr^2}{4} & 0 & 0 \\ 0 & 0 & \frac{mr^2}{4} & 0 \\ -\frac{ml}{2} & 0 & 0 & m \end{bmatrix}$$

For a slender link ($l >> r$)

$$J_i = \begin{bmatrix} \frac{ml^2}{3} & 0 & 0 & -\frac{ml}{2} \\ 0 & 0 & 0 & 0 \\ 0 & 0 & 0 & 0 \\ -\frac{ml}{2} & 0 & 0 & m \end{bmatrix}$$

Determination of Robotic Joint Torques

Lagrange-Euler Formulation

$$\frac{d}{dt}\left(\frac{\partial L}{\partial \dot{q}_i}\right) - \frac{\partial L}{\partial q_i} = \tau_i,$$

Where $i = 1, 2, \ldots\ldots, n$

$n =$ No. of joints

L: Lagrangian function

$L = K(K.E) - P(P.E)$

$q_i =$ Generalized coordinates

$q_i = \theta_i$ for a rotary joint

$= d_i$ for a prismatic joint

$\dot{q}_i =$ first time (t) derivative of q_i

τ_i : Generalized torque for a rotary joint

: Generalized force for a linear joint

Let us consider i-th link of a serial manipulator
Position of a fixed point lying on this link

$$ {}^{i}_{i}\bar{r} = \begin{bmatrix} x_i \\ y_i \\ z_i \\ 1 \end{bmatrix} $$

$$ {}^{0}_{i}\bar{r} = {}^{0}_{i}T \; {}^{i}_{i}\bar{r} $$

where $ {}^{0}_{i}T = {}^{0}_{1}T \; {}^{1}_{2}T \ldots\ldots {}^{i-1}_{i}T $

Determination of Kinetic Energy (K) of the Manipulator

Velocity of a particle of link *i* w.r. to base coordinate system

$$ {}^{0}_{i}\overline{V} = \frac{d}{dt}\left({}^{0}_{i}\overline{r}\right) $$

$$ {}^{0}_{i}\overline{V} = \frac{d}{dt}\left({}^{0}_{i}T\,{}^{i}_{i}\overline{r}\right) = {}^{0}_{1}\dot{T}\,{}^{1}_{2}T\ldots\ldots{}^{i-1}_{i}T\,{}^{i}_{i}\overline{r} + \ldots\ldots + {}^{0}_{1}T\,{}^{1}_{2}T\ldots\ldots{}^{i-1}_{i}\dot{T}\,{}^{i}_{i}\overline{r} + {}^{0}_{i}T\,{}^{i}_{i}\dot{\overline{r}} $$

$$ = \left(\sum_{j=1}^{i}\frac{\partial\,{}^{0}_{i}T}{\partial q_j}\dot{q}_j\right){}^{i}_{i}\overline{r}, \text{as } {}^{i}_{i}\dot{\overline{r}} = 0 $$

Let $\dfrac{\partial\,{}^{0}_{i}T}{\partial q_j} = U_{ij}$ Therefore, ${}^{0}_{i}\overline{V} = \left(\sum_{j=1}^{i} U_{ij}\dot{q}_j\right){}^{i}_{i}\overline{r}$

Note: $U_{ijk} = \dfrac{\partial U_{ij}}{\partial q_k}$

Kinetic energy of the particle having differential mass dm

$$dK_i = \frac{1}{2}\left(\dot{x}_i^2 + \dot{y}_i^2 + \dot{z}_i^2\right)dm = \frac{1}{2}T_r\left({}^0_i\overline{V}\,{}^0_i\overline{V}^{T'}\right)dm$$

where T_r: Trace of a matrix

$$dk_i = \frac{1}{2}T_r\left[\sum_{a=1}^{i} U_{ia}\dot{q}_a\,{}^i_i\bar{r}\left[\sum_{b=1}^{i} U_{ib}\dot{q}_b\,{}^i_i\bar{r}\right]^{T'}\right]dm$$

$$= \frac{1}{2}T_r\left[\sum_{a=1}^{i}\sum_{b=1}^{i} U_{ia}\,{}^i_i\bar{r}\,{}^i_i\bar{r}^{T'}\,U^{T'}_{ib}\dot{q}_a\dot{q}_b\right]dm$$

$$= \frac{1}{2}T_r\left[\sum_{a=1}^{i}\sum_{b=1}^{i} U_{ia}\left({}^i_i\bar{r}\,dm\,{}^i_i\bar{r}^{T'}\right)U^{T'}_{ib}\dot{q}_a\dot{q}_b\right]$$

Kinetic energy of i-th link

$$K_i = \int dk_i = \frac{1}{2} T_r \left[\sum_{a=1}^{i} \sum_{b=1}^{i} U_{ia} \left(\int {}^{i}_{i}\bar{r}\, {}^{i}_{i}\bar{r}^{T'} dm \right) U^{T'}_{ib} \dot{q}_a \dot{q}_b \right]$$

$$= \frac{1}{2} T_r \left[\sum_{a=1}^{i} \sum_{b=1}^{i} U_{ia} J_i U^{T'}_{ib} \dot{q}_a \dot{q}_b \right]$$

Where inertia tensor

$$\boldsymbol{J_i} = \int {}^{i}_{i}\bar{\boldsymbol{r}}\, {}^{i}_{i}\bar{\boldsymbol{r}}^{T'}\, \boldsymbol{dm}$$

Total K.E. of the serial manipulator having n links

$$K = \sum_{i=1}^{n} k_i = \sum_{i=1}^{n} \frac{1}{2} T_r \left[\sum_{a=1}^{i} \sum_{b=1}^{i} U_{ia} J_i U^{T'}_{ib} \dot{q}_a \dot{q}_b \right]$$

Total K.E. of the serial manipulator having n links

$$K = \sum_{i=1}^{n} k_i = \sum_{i=1}^{n} \frac{1}{2} T_r \left[\sum_{a=1}^{i} \sum_{b=1}^{i} U_{ia} J_i U_{ib}^{T} \dot{q}_a \dot{q}_b \right]$$

$$K = \frac{1}{2} \sum_{i=1}^{n} \sum_{a=1}^{i} \sum_{b=1}^{i} \left[T_r \left(U_{ia} J_i U_{ib}^{T} \right) \dot{q}_a \dot{q}_b \right]$$

Determination of Potential Energy of the manipulator

Potential energy of i-th link

$$P_i = -m_i \bar{g}\, {}^{o}_{i}\bar{r} = -m_i \bar{g} \left({}^{o}_{i}T^{i}_{i}\bar{r} \right)$$

where $\bar{g} = \left(g_x, g_y, g_z, 0 \right)$

Total potential energy of the manipulator

$$P = \sum_{i=1}^{n} P_i = \sum_{i=1}^{n} -m_i \bar{g}\, {}^{o}_{i}T\, {}^{i}_{i}\bar{r}$$

Now, $L = K - P$

$$= \frac{1}{2}\sum_{i=1}^{n}\sum_{a=1}^{i}\sum_{b=1}^{i}\left[T_r\left(U_{ia} J_i U_{ib}^{T'}\right)\dot{q}_a \dot{q}_b\right] + \sum_{i=1}^{n} m_i \bar{g}\left({}^{o}_{i}T\, {}^{i}_{i}\bar{r}\right)$$

Using Lagrange-Euler equation, we get

$$\tau_i = \sum_{c=1}^{n} D_{ic}\ddot{q}_c + \sum_{c=1}^{n}\sum_{d=1}^{n} h_{icd}\dot{q}_c \dot{q}_d + C_i,$$

where $i = 1, 2, \ldots, n$

Inertia term

$$D_{ic} = \sum_{j=\max(i,c)}^{n} T_r\left(U_{jc} J_j U_{ji}^{T'}\right) \qquad i, c = 1, 2, \ldots, n$$

Coriolis and centrifugal term

$$h_{icd} = \sum_{j=\max(i,c,d)}^{n} T_r\left(U_{jcd} J_j U_{ji}^{T'}\right) \qquad i, c, d = 1, 2, \ldots, n$$

Gravity term

$$C_i = \sum_{j=i}^{n}\left(-m_j \bar{g} U_{ji}\, {}^{j}_{j}\bar{r}\right) \qquad i = 1, 2, \ldots, n$$

An Example

$$
{}^{0}_{1}T = \begin{bmatrix} c\theta_1 & -s\theta_1 & 0 & L_1 c\theta_1 \\ s\theta_1 & c\theta_1 & 0 & L_1 s\theta_1 \\ 0 & 0 & 1 & 0 \\ 0 & 0 & 0 & 1 \end{bmatrix}
$$

$$
{}^{0}_{2}T = \begin{bmatrix} c\theta_{12} & -s\theta_{12} & 0 & L_1 c\theta_1 + L_2 c\theta_{12} \\ s\theta_{12} & c\theta_{12} & 0 & L_1 s\theta_1 + L_2 s\theta_{12} \\ 0 & 0 & 1 & 0 \\ 0 & 0 & 0 & 1 \end{bmatrix}
$$

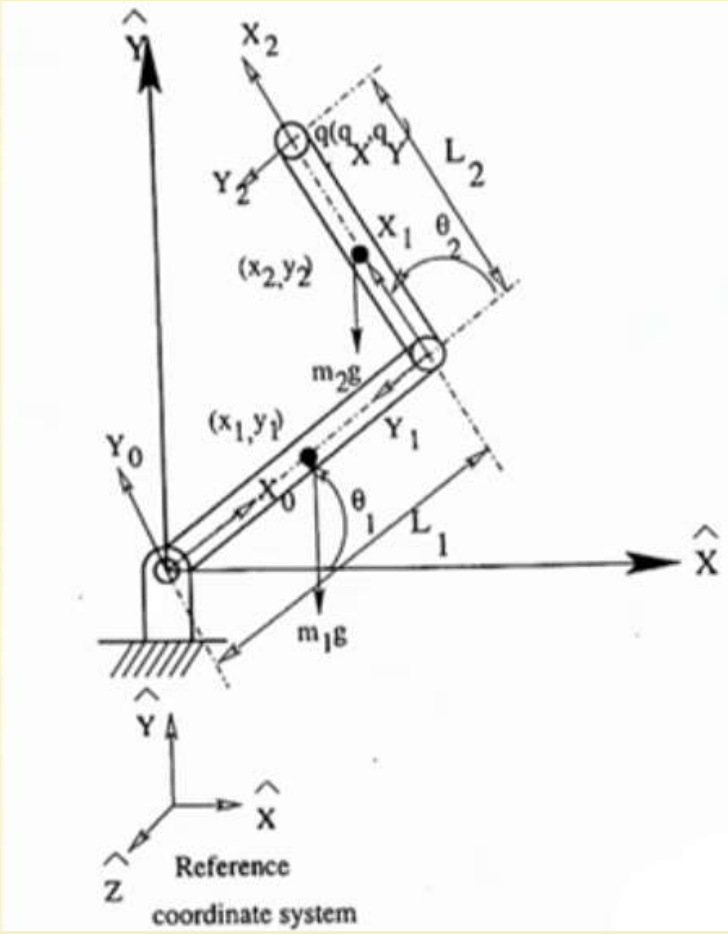

$$\tau_1 = (D_{11}\ddot{\theta}_1 + D_{12}\ddot{\theta}_2) + h_{111}\dot{\theta}_1^{\,2} + h_{112}\dot{\theta}_1\dot{\theta}_2 + h_{121}\dot{\theta}_1\dot{\theta}_2 + h_{122}\dot{\theta}_2^{\,2} + C_1$$

$$\tau_2 = (D_{21}\ddot{\theta}_1 + D_{22}\ddot{\theta}_2) + h_{211}\dot{\theta}_1^{\,2} + h_{212}\dot{\theta}_1\dot{\theta}_2 + h_{221}\dot{\theta}_1\dot{\theta}_2 + h_{222}\dot{\theta}_2^{\,2} + C_2$$

$$\begin{aligned} U_{11} &= \frac{\partial_1^0 T}{\partial \theta_1} \\ &= \begin{bmatrix} -s\theta_1 & -c\theta_1 & 0 & -L_1 s\theta_1 \\ c\theta_1 & -s\theta_1 & 0 & L_1 c\theta_1 \\ 0 & 0 & 0 & 0 \\ 0 & 0 & 0 & 0 \end{bmatrix} \end{aligned}$$

$$
\begin{aligned}
U_{21} &= \frac{\partial {}^0_2T}{\partial \theta_1} \\
&= \begin{bmatrix} -s\theta_{12} & -c\theta_{12} & 0 & -L_1 s\theta_1 - L_2 s\theta_{12} \\ c\theta_{12} & -s\theta_{12} & 0 & L_1 c\theta_1 + L_2 c\theta_{12} \\ 0 & 0 & 0 & 0 \\ 0 & 0 & 0 & 0 \end{bmatrix}
\end{aligned}
$$

$$
\begin{aligned}
U_{22} &= \frac{\partial {}^0_2T}{\partial \theta_2} \\
&= \begin{bmatrix} -s\theta_{12} & -c\theta_{12} & 0 & -L_2 s\theta_{12} \\ c\theta_{12} & -s\theta_{12} & 0 & L_2 c\theta_{12} \\ 0 & 0 & 0 & 0 \\ 0 & 0 & 0 & 0 \end{bmatrix}
\end{aligned}
$$

$$J_1 = \begin{bmatrix} \frac{m_1 L_1^2}{3} & 0 & 0 & -\frac{1}{2} m_1 L_1 \\ 0 & \frac{m_1 r^2}{4} & 0 & 0 \\ 0 & 0 & \frac{m_1 r^2}{4} & 0 \\ -\frac{1}{2} m_1 L_1 & 0 & 0 & m_1 \end{bmatrix}$$

$$J_2 = \begin{bmatrix} \frac{m_2 L_2^2}{3} & 0 & 0 & -\frac{1}{2} m_2 L_2 \\ 0 & \frac{m_2 r^2}{4} & 0 & 0 \\ 0 & 0 & \frac{m_2 r^2}{4} & 0 \\ -\frac{1}{2} m_2 L_2 & 0 & 0 & m_2 \end{bmatrix}$$

$$
\begin{aligned}
D_{11} &= Tr(U_{11}J_1U_{11}^{T'}) + Tr(U_{21}J_2U_{21}^{T'}) \\
&= (\frac{1}{3}m_1 + m_2)L_1^2 + \frac{1}{3}m_2L_2^2 + m_2L_1L_2c\theta_2 + \frac{1}{4}r^2(m_1 + m_2)
\end{aligned}
$$

$$
\begin{aligned}
D_{12} &= Tr(U_{22}J_2U_{21}^{T'}) \\
&= \frac{1}{3}m_2L_2^2 + \frac{1}{4}m_2r^2 + \frac{1}{2}m_2L_1L_2c\theta_2
\end{aligned}
$$

$$
\begin{aligned}
D_{21} &= Tr(U_{21}J_2U_{22}^{T'}) \\
&= \frac{1}{3}m_2L_2^2 + \frac{1}{4}m_2r^2 + \frac{1}{2}m_2L_1L_2c\theta_2
\end{aligned}
$$

$$
\begin{aligned}
D_{22} &= Tr(U_{22}J_2U_{22}^{T'}) \\
&= \frac{1}{3}m_2L_2^2 + \frac{1}{4}m_2r^2
\end{aligned}
$$

$$h_{111} = Tr(U_{111} J_1 U_{11}^{T'}) + Tr(U_{211} J_2 U_{21}^{T'}),$$

$$U_{111} = \frac{\partial U_{11}}{\partial \theta_1} = \begin{bmatrix} -c\theta_1 & s\theta_1 & 0 & -L_1 c\theta_1 \\ -s\theta_1 & -c\theta_1 & 0 & -L_1 s\theta_1 \\ 0 & 0 & 0 & 0 \\ 0 & 0 & 0 & 0 \end{bmatrix}$$

$$U_{211} = \frac{\partial U_{21}}{\partial \theta_1} = \begin{bmatrix} -c\theta_{12} & s\theta_{12} & 0 & -L_1 c\theta_1 - L_2 c\theta_{12} \\ -s\theta_{12} & -c\theta_{12} & 0 & -L_1 s\theta_1 - L_2 s\theta_{12} \\ 0 & 0 & 0 & 0 \\ 0 & 0 & 0 & 0 \end{bmatrix}$$

$$h_{111} = 0.$$

$$h_{112} = Tr(U_{212} J_2 U_{21}^{T'}),$$

$$\begin{aligned} U_{212} &= \frac{\partial U_{21}}{\partial \theta_2} \\ &= \begin{bmatrix} -c\theta_{12} & s\theta_{12} & 0 & -L_2 c\theta_{12} \\ -s\theta_{12} & -c\theta_{12} & 0 & -L_2 s\theta_{12} \\ 0 & 0 & 0 & 0 \\ 0 & 0 & 0 & 0 \end{bmatrix} \end{aligned}$$

$$h_{112} = -\tfrac{1}{2} m_2 L_1 L_2 s\theta_2.$$

$$h_{121} = Tr(U_{221} J_2 U_{21}^{T'}),$$

$$\begin{aligned} U_{221} &= \frac{\partial U_{22}}{\partial \theta_1} \\ &= \begin{bmatrix} -c\theta_{12} & s\theta_{12} & 0 & -L_2 c\theta_{12} \\ -s\theta_{12} & -c\theta_{12} & 0 & -L_2 s\theta_{12} \\ 0 & 0 & 0 & 0 \\ 0 & 0 & 0 & 0 \end{bmatrix} \end{aligned}$$

$$h_{121} = -\frac{1}{2} m_2 L_1 L_2 s\theta_2$$

$$h_{122} = Tr(U_{222} J_2 U_{21}^{T'}),$$

$$\begin{aligned} U_{222} &= \frac{\partial U_{22}}{\partial \theta_2} \\ &= \begin{bmatrix} -c\theta_{12} & s\theta_{12} & 0 & -L_2 c\theta_{12} \\ -s\theta_{12} & -c\theta_{12} & 0 & -L_2 s\theta_{12} \\ 0 & 0 & 0 & 0 \\ 0 & 0 & 0 & 0 \end{bmatrix} \end{aligned}$$

$$h_{122} = -\tfrac{1}{2} m_2 L_1 L_2 s\theta_2.$$

$$
\begin{aligned}
h_1 &= h_{111}\dot{\theta}_1^2 + h_{112}\dot{\theta}_1\dot{\theta}_2 + h_{121}\dot{\theta}_1\dot{\theta}_2 + h_{122}\dot{\theta}_2^2 \\
&= -m_2 L_1 L_2 s\theta_2 \dot{\theta}_1\dot{\theta}_2 - \frac{1}{2} m_2 L_1 L_2 s\theta_2 \dot{\theta}_2{}^2
\end{aligned}
$$

$$
h_{211} = Tr(U_{211} J_2 U_{22}^{T'}),
$$

$$
h_{21\mathrm{i}} = \tfrac{1}{2} m_2 L_1 L_2 s\theta_2
$$

$$h_{212} = Tr(U_{212} J_2 U_{22}^{T'}),$$

$$\begin{aligned} U_{212} &= \frac{\partial U_{21}}{\partial \theta_2} \\ &= \begin{bmatrix} -c\theta_{12} & s\theta_{12} & 0 & -L_2 c\theta_{12} \\ -s\theta_{12} & -c\theta_{12} & 0 & -L_2 s\theta_{12} \\ 0 & 0 & 0 & 0 \\ 0 & 0 & 0 & 0 \end{bmatrix} \end{aligned}$$

$$h_{212} = 0$$

$$h_{221} = Tr(U_{221} J_2 U_{22}^{T'}),$$

$$\begin{aligned} U_{221} &= \frac{\partial U_{22}}{\partial \theta_1} \\ &= \begin{bmatrix} -c\theta_{12} & s\theta_{12} & 0 & -L_2 c\theta_{12} \\ -s\theta_{12} & -c\theta_{12} & 0 & -L_2 s\theta_{12} \\ 0 & 0 & 0 & 0 \\ 0 & 0 & 0 & 0 \end{bmatrix} \end{aligned}$$

$$h_{221} = 0$$

$$h_{222} = Tr(U_{222} J_2 U_{22}^{T'}),$$

$$\begin{aligned} U_{222} &= \frac{\partial U_{22}}{\partial \theta_2} \\ &= \begin{bmatrix} -c\theta_{12} & s\theta_{12} & 0 & -L_2 c\theta_{12} \\ -s\theta_{12} & -c\theta_{12} & 0 & -L_2 s\theta_{12} \\ 0 & 0 & 0 & 0 \\ 0 & 0 & 0 & 0 \end{bmatrix} \end{aligned}$$

$$h_{222} = 0$$

$$\begin{aligned} h_2 &= h_{211}\dot{\theta}_1^2 + h_{212}\dot{\theta}_1\dot{\theta}_2 + h_{221}\dot{\theta}_1\dot{\theta}_2 + h_{222}\dot{\theta}_2^2 \\ &= \frac{1}{2} m_2 L_1 L_2 s\theta_2 \dot{\theta}_1^{\,2} \end{aligned}$$

$$
\begin{aligned}
C_1 &= \sum_{j=1}^{2}(-m_j \bar{g} U_{j1} {}^{j}_{j}\bar{r}) \\
&= -m_1 \bar{g} U_{11} {}^{1}_{1}\bar{r} - m_2 \bar{g} U_{21} {}^{2}_{2}\bar{r}
\end{aligned}
$$

Substituting the values of $\bar{g} = (0 \ -g \ 0 \ 0)$, U_{11}, U_{21}, ${}^{1}_{1}\bar{r} = (-\frac{L_1}{2} \ 0 \ 0 \ 1)^{T'}$ and ${}^{2}_{2}\bar{r} = (-\frac{L_2}{2} \ 0 \ 0 \ 1)^{T'}$ in the above expression, we get

$$
C_1 = \frac{1}{2} m_1 g L_1 c\theta_1 + m_2 g L_1 c\theta_1 + \frac{1}{2} m_2 g L_2 c\theta_{12}
$$

$$C_2 = -m_2 \bar{g} U_{22} {}^2_2\bar{r}$$

Substituting the values of $\bar{g} = (0 \ -g \ 0 \ 0)$, U_{22}, ${}^2_2\bar{r} = (-\frac{L_2}{2} \ 0 \ 0 \ 1)^{T'}$ in the above expression, we get

$$C_2 = \frac{1}{2} m_2 g L_2 c\theta_{12}$$

$$
\begin{aligned}
\tau_1 \;=\; & ((\frac{1}{3}m_1 + m_2)L_1^2 + \frac{1}{3}m_2L_2^2 + m_2L_1L_2c\theta_2 + \frac{1}{4}r^2(m_1+m_2))\ddot{\theta}_1 + \\
& (\frac{1}{3}m_2L_2^2 + \frac{1}{4}m_2r^2 + \frac{1}{2}m_2L_1L_2c\theta_2)\ddot{\theta}_2 - m_2L_1L_2s\theta_2\dot{\theta}_1\dot{\theta}_2 - \\
& \frac{1}{2}m_2L_1L_2s\theta_2\dot{\theta}_2^{\,2} + \frac{1}{2}m_1gL_1c\theta_1 + m_2gL_1c\theta_1 \\
& + \frac{1}{2}m_2gL_2c\theta_{12}
\end{aligned}
$$

$$
\begin{aligned}
\tau_2 \;=\; & ((\frac{1}{3}m_2L_2^2 + \frac{1}{4}m_2r^2 + \frac{1}{2}m_2L_1L_2c\theta_2)\ddot{\theta}_1 + (\frac{1}{3}m_2L_2^2 + \frac{1}{4}m_2r^2)\ddot{\theta}_2) + \\
& \frac{1}{2}m_2L_1L_2s\theta_2\dot{\theta}_1^{\,2} + \frac{1}{2}m_2gL_2c\theta_{12}
\end{aligned}
$$

Another approach

$$I_{XX} = \frac{1}{2}mr^2$$
$$I_{YY} = \frac{1}{3}mL^2 + \frac{1}{4}mr^2$$
$$I_{ZZ} = \frac{1}{3}mL^2 + \frac{1}{4}mr^2$$

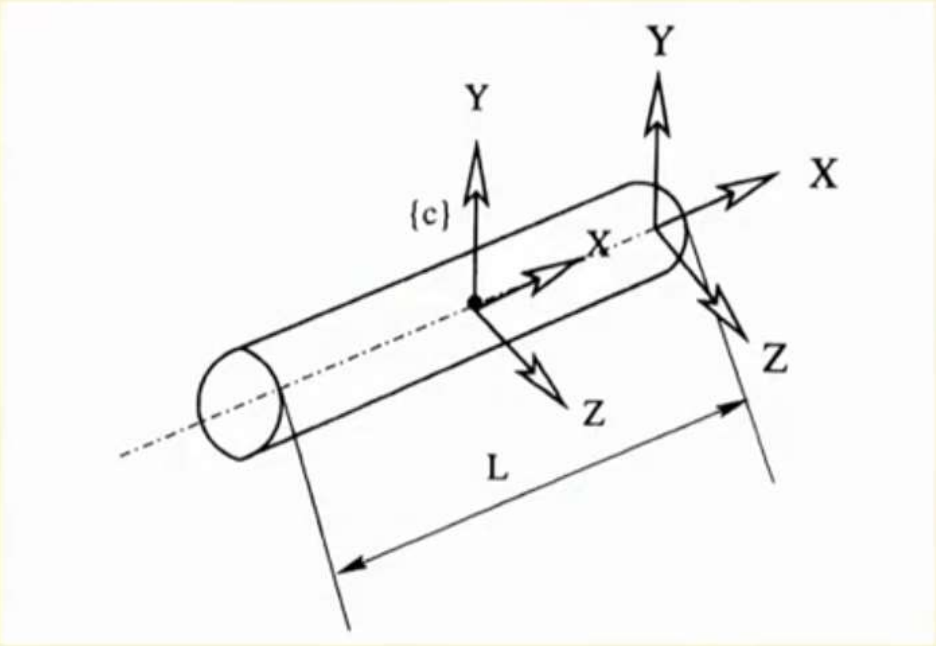

Parallel Axis Theorem

The moment of Inertia of a body about an axis parallel to the body passing through its mass centre is equal to the sum of the moment of Inertia of the body about the axis passing through the centre and the product of the mass of the body times the squares of the distance of between the two axis

$$\begin{aligned} {}^{C}I_{ZZ} &= I_{ZZ} - m(\bar{X}^2 + \bar{Y}^2) \\ &= \frac{1}{3}mL^2 + \frac{1}{4}mr^2 - m(\frac{L^2}{4} + 0) \\ &= \frac{1}{12}mL^2 + \frac{1}{4}mr^2 \end{aligned}$$

Kinetic energy (first link)

$$K_1 = \frac{1}{2} m_1 \bar{v_1}^2 + \frac{1}{2} I_1 \bar{\omega}_1^2,$$

$$\bar{v}_1 = \frac{d}{dt}\left(\frac{L_1}{2}\theta_1\right) = \frac{1}{2} L_1 \dot{\theta}_1$$
$$\bar{\omega}_1 = \dot{\theta}_1$$
$$I_1 = \frac{1}{12} m_1 L_1^2 + \frac{1}{4} m_1 r^2$$

$$K_1 = \frac{1}{6} m_1 L_1^2 \dot{\theta_1}^2 + \frac{1}{8} m_1 r^2 \dot{\theta_1}^2$$

Potential energy (first link)

$$P_1 = -m_1(-g)\frac{L_1}{2} s\theta_1 = \frac{1}{2} m_1 g L_1 s\theta_1,$$

Second link

$$\bar{x}_2 = L_1 c\theta_1 + \frac{L_2}{2} c\theta_{12};\ \bar{y}_2 = L_1 s\theta_1 + \frac{L_2}{2} s\theta_{12}.$$

$$\dot{\bar{x}}_2 = -L_1 s\theta_1 \dot{\theta}_1 - \frac{L_2}{2} s\theta_{12}(\dot{\theta}_1 + \dot{\theta}_2),$$
$$\dot{\bar{y}}_2 = L_1 c\theta_1 \dot{\theta}_1 + \frac{L_2}{2} c\theta_{12}(\dot{\theta}_1 + \dot{\theta}_2)$$

$$\begin{aligned} \bar{v}_2^2 &= \dot{\bar{x}}_2{}^2 + \dot{\bar{y}}_2{}^2 \\ &= L_1^2 \dot{\theta}_1{}^2 + \frac{L_2^2}{4}(\dot{\theta}_1{}^2 + 2\dot{\theta}_1\dot{\theta}_2 + \dot{\theta}_2{}^2) + L_1 L_2 c\theta_2(\dot{\theta}_1{}^2 + \dot{\theta}_1\dot{\theta}_2) \end{aligned}$$

Kinetic energy

$$K_2 = \tfrac{1}{2} m_2 \bar{v_2}^2 + \tfrac{1}{2} I_2 \bar{\omega_2}^2,$$

$$\begin{aligned}
K_2 &= \frac{1}{2} m_2 L_1^2 \dot{\theta_1}^2 + \frac{m_2 L_2^2}{8}(\dot{\theta_1}^2 + 2\dot{\theta}_1\dot{\theta}_2 + \dot{\theta_2}^2) + \frac{1}{2} m_2 L_1 L_2 c\theta_2 (\dot{\theta_1}^2 + \dot{\theta}_1\dot{\theta}_2) \\
&\quad + \frac{1}{2}(\frac{1}{12} m_2 L_2^2 + \frac{1}{4} m_2 r^2)(\dot{\theta}_1 + \dot{\theta}_2)^2 \\
&= \frac{1}{2} m_2 L_1^2 \dot{\theta}_1^2 + (\frac{1}{6} m_2 L_2^2 + \frac{1}{8} m_2 r^2)(\dot{\theta}_1 + \dot{\theta}_2)^2 + \frac{1}{2} m_2 L_1 L_2 c\theta_2 \dot{\theta_1}^2 + \\
&\quad \frac{1}{2} m_2 L_1 L_2 c\theta_2 \dot{\theta}_1 \dot{\theta}_2
\end{aligned}$$

Potential energy

$$\begin{aligned}
P_2 &= -m_2(-g) L_1 s\theta_1 - m_2(-g)\frac{L_2}{2} s\theta_{12} \\
&= m_2 g L_1 s\theta_1 + \frac{1}{2} m_2 g L_2 s\theta_{12}
\end{aligned}$$

Lagrangian

$$
\begin{aligned}
L &= K_1 + K_2 - P_1 - P_2 \\
&= \frac{1}{6}m_1 L_1^2 \dot{\theta_1}^2 + \frac{1}{8}m_1 r^2 \dot{\theta_1}^2 + \frac{1}{2}m_2 L_1^2 \dot{\theta_1}^2 + (\frac{1}{6}m_2 L_2^2 + \frac{1}{8}m_2 r^2)(\dot{\theta_1} + \dot{\theta_2})^2 \\
&\quad + \frac{1}{2}m_2 L_1 L_2 c\theta_2 \dot{\theta_1}^2 + \frac{1}{2}m_2 L_1 L_2 c\theta_2 \dot{\theta_1}\dot{\theta_2} - \frac{1}{2}m_1 g L_1 s\theta_1 - m_2 g L_1 s\theta_1 - \\
&\quad \frac{1}{2}m_2 g L_2 s\theta_{12}
\end{aligned}
$$

Lagrange-Euler equation (first joint)

$$\tau_1 = \frac{d}{dt}\left(\frac{\partial L}{\partial \dot{\theta}_1}\right) - \frac{\partial L}{\partial \theta_1}$$

$$\frac{\partial L}{\partial \theta_1} = -\left(\frac{1}{2}m_1 + m_2\right)gL_1c\theta_1 - \frac{1}{2}m_2gL_2c\theta_{12};$$

$$\begin{aligned}\frac{\partial L}{\partial \dot{\theta}_1} = {} & \left(\frac{1}{3}m_1 + m_2\right)L_1^2\dot{\theta}_1 + \frac{1}{3}m_2L_2^2(\dot{\theta}_1 + \dot{\theta}_2) + \frac{1}{2}m_2L_1L_2c\theta_2(2\dot{\theta}_1 + \dot{\theta}_2) + \\ & \frac{1}{4}m_1r^2\dot{\theta}_1 + \frac{1}{4}m_2r^2(\dot{\theta}_1 + \dot{\theta}_2)\end{aligned}$$

$$
\begin{aligned}
\frac{d}{dt}\left(\frac{\partial L}{\partial \dot{\theta}_1}\right) &= \left(\frac{1}{3}m_1 + m_2\right)L_1^2\ddot{\theta}_1 + \frac{1}{3}m_2L_2^2(\ddot{\theta}_1 + \ddot{\theta}_2) + \frac{1}{2}m_2L_1L_2c\theta_2(2\ddot{\theta}_1 + \ddot{\theta}_2) \\
&\quad + \frac{1}{2}m_2L_1L_2(2\dot{\theta}_1 + \dot{\theta}_2)(-s\theta_2)\dot{\theta}_2 + \frac{1}{4}m_1r^2\ddot{\theta}_1 + \frac{1}{4}m_2r^2(\ddot{\theta}_1 + \ddot{\theta}_2)
\end{aligned}
$$

$$
\begin{aligned}
\tau_1 &= \left(\left(\frac{1}{3}m_1 + m_2\right)L_1^2 + \frac{1}{3}m_2L_2^2 + m_2L_1L_2c\theta_2 + \frac{1}{4}r^2(m_1 + m_2)\right)\ddot{\theta}_1 + \\
&\quad \left(\frac{1}{3}m_2L_2^2 + \frac{1}{4}m_2r^2 + \frac{1}{2}m_2L_1L_2c\theta_2\right)\ddot{\theta}_2 - m_2L_1L_2s\theta_2\dot{\theta}_1\dot{\theta}_2 - \\
&\quad \frac{1}{2}m_2L_1L_2s\theta_2\dot{\theta}_2^{\,2} + \frac{1}{2}m_1gL_1c\theta_1 + m_2gL_1c\theta_1 + \frac{1}{2}m_2gL_2c\theta_{12}
\end{aligned}
$$

Second joint

$$\tau_2 = \frac{d}{dt}\left(\frac{\partial L}{\partial \dot{\theta}_2}\right) - \frac{\partial L}{\partial \theta_2}$$

$$\frac{\partial L}{\partial \theta_2} = \frac{1}{2}m_2 L_1 L_2(-s\theta_2)\dot{\theta}_1^{\,2} + \frac{1}{2}m_2 L_1 L_2(-s\theta_2)\dot{\theta}_1\dot{\theta}_2 - \frac{1}{2}m_2 g L_2 c\theta_{12};$$

$$\frac{\partial L}{\partial \dot{\theta}_2} = \left(\frac{1}{3}m_2 L_2^2 + \frac{1}{4}m_2 r^2\right)(\dot{\theta}_1 + \dot{\theta}_2) + \frac{1}{2}m_2 L_1 L_2 c\theta_2 \dot{\theta}_1;$$

$$\begin{aligned}\frac{d}{dt}\left(\frac{\partial L}{\partial \dot{\theta}_2}\right) &= \left(\frac{1}{3}m_2 L_2^2 + \frac{1}{4}m_2 r^2 + \frac{1}{2}m_2 L_1 L_2 c\theta_2\right)\ddot{\theta}_1 + \left(\frac{1}{3}m_2 L_2^2 + \frac{1}{4}m_2 r^2\right)\ddot{\theta}_2 \\ &\quad -\frac{1}{2}m_2 L_1 L_2 s\theta_2 \dot{\theta}_1 \dot{\theta}_2\end{aligned}$$

$$\begin{aligned}\tau_2 &= \left(\left(\frac{1}{3}m_2 L_2^2 + \frac{1}{4}m_2 r^2 + \frac{1}{2}m_2 L_1 L_2 c\theta_2\right)\ddot{\theta}_1 + \left(\frac{1}{3}m_2 L_2^2 + \frac{1}{4}m_2 r^2\right)\ddot{\theta}_2\right) + \\ &\quad \frac{1}{2}m_2 L_1 L_2 s\theta_2 \dot{\theta}_1^{\,2} + \frac{1}{2}m_2 g L_2 c\theta_{12}\end{aligned}$$

For slender links L >> r

$$\begin{aligned}\tau_1 &= ((\frac{1}{3}m_1 + m_2)L_1^2 + \frac{1}{3}m_2L_2^2 + m_2L_1L_2c\theta_2)\ddot{\theta}_1 + (\frac{1}{3}m_2L_2^2 \\ &+ \frac{1}{2}m_2L_1L_2c\theta_2)\ddot{\theta}_2 - m_2L_1L_2s\theta_2\dot{\theta}_1\dot{\theta}_2 - \frac{1}{2}m_2L_1L_2s\theta_2\dot{\theta}_2{}^2 + \\ &\frac{1}{2}m_1gL_1c\theta_1 + m_2gL_1c\theta_1 + \frac{1}{2}m_2gL_2c\theta_{12}\end{aligned}$$

$$\begin{aligned}\tau_2 &= ((\frac{1}{3}m_2L_2^2 + \frac{1}{2}m_2L_1L_2c\theta_2)\ddot{\theta}_1 + (\frac{1}{3}m_2L_2^2)\ddot{\theta}_2) + \frac{1}{2}m_2L_1L_2s\theta_2\dot{\theta}_1{}^2 + \\ &\frac{1}{2}m_2gL_2c\theta_{12}\end{aligned}$$